WPC-95 Power/Driver Board 10034

Board Rart Number / Platinenbauteilenummer 2005025 Rev.C, F

Schematics / Schaltpläne

© 2005 / (2023) by PinLED Rev C, (F)

Contents - Inhalt

Page 1 / Seite 1.....Frontpage / Deckblatt
Page 2 / Seite 2.....Table of contents / Inhaltsverzeichnis
Page 3 / Seite 3.....Rectifier-Power Section Rev C / Gleichrichter-Spannungsversorgungs Sektion Rev C
Page 4 / Seite 4.....Rectifier-Power Section Rev F / Gleichrichter-Spannungsversorgungs Sektion Rev F
Page 5 / Seite 5.....Gen. Illumination / Gen. Beleuchtung
Page 6 / Seite 6.....Lamp Rows / Lampenreihen
Page 7 / Seite 7.....Lamp Columns / Lampenspalten
Page 8 / Seite 8.....Solenoids 1-16 / Spulen 1-16
Page 9 / Seite 9.....Solenoids17-28 / Spulen 17-28
Page 10 / Seite 10.....Flipper circuits / Flipperschaltkeise
Page 11 / Seite 11.....Digital I/O Ports / Digital I/O Ports
Page 12 / Seite 12.....CPLD Chip / CPLD Chip
Page 13 / Seite 13.....Fuse, LEDs and Testpoint Overview / Sicherungs-, LEDs- und Testpunktübersicht
Page 14 / Seite 14.....Partslist / Bauteilliste
Page 15 / Seite 15.....Partslist / Bauteilliste
Page 16 / Seite 16.....Partslist / Bauteilliste

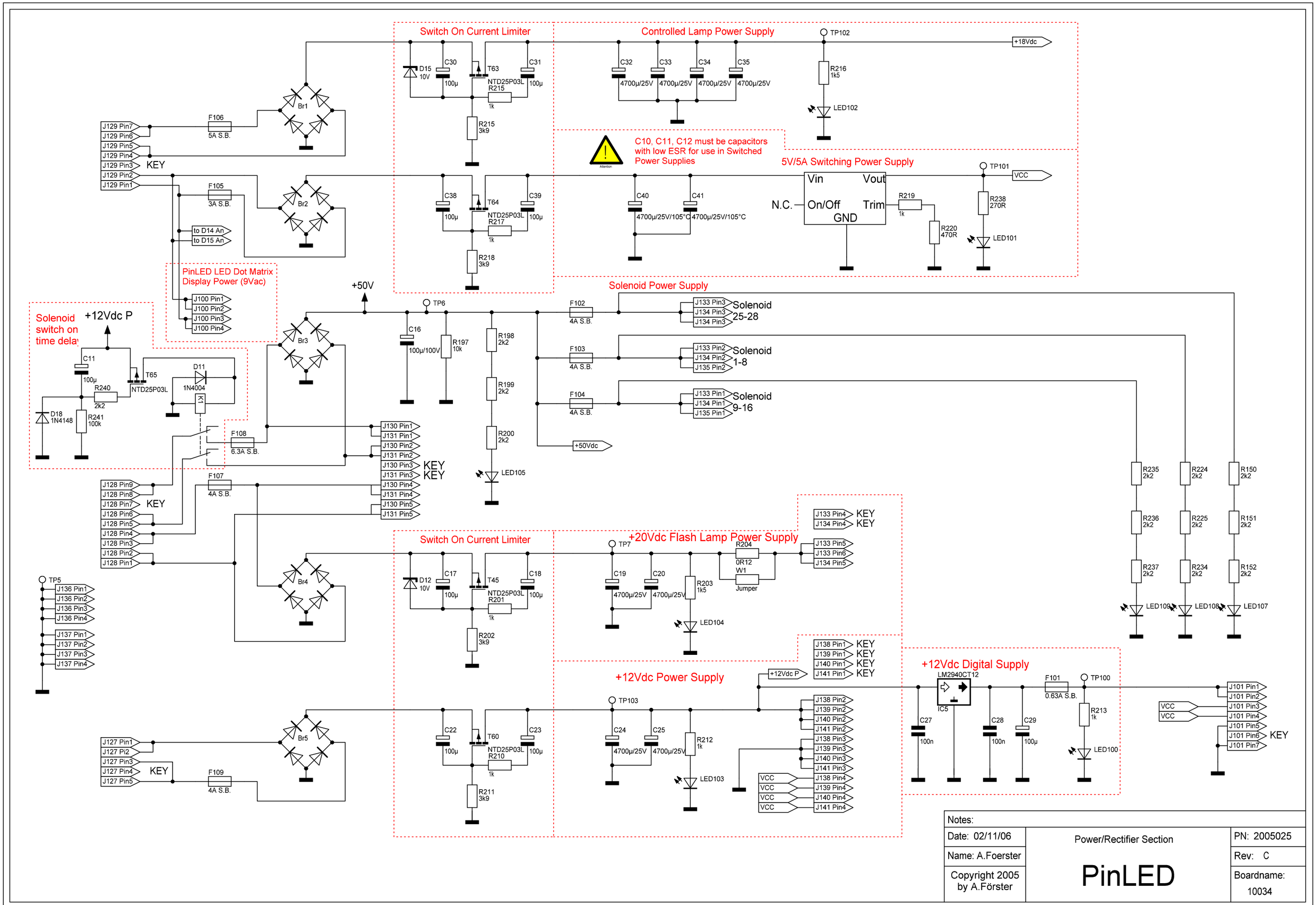

Notes:

Date: 02/11/06	Power/Rectifier Section	PN: 2005025
Name: A.Foerster	PinLED	Rev: C
Copyright 2005 by A.Förster		Boardname: 10034

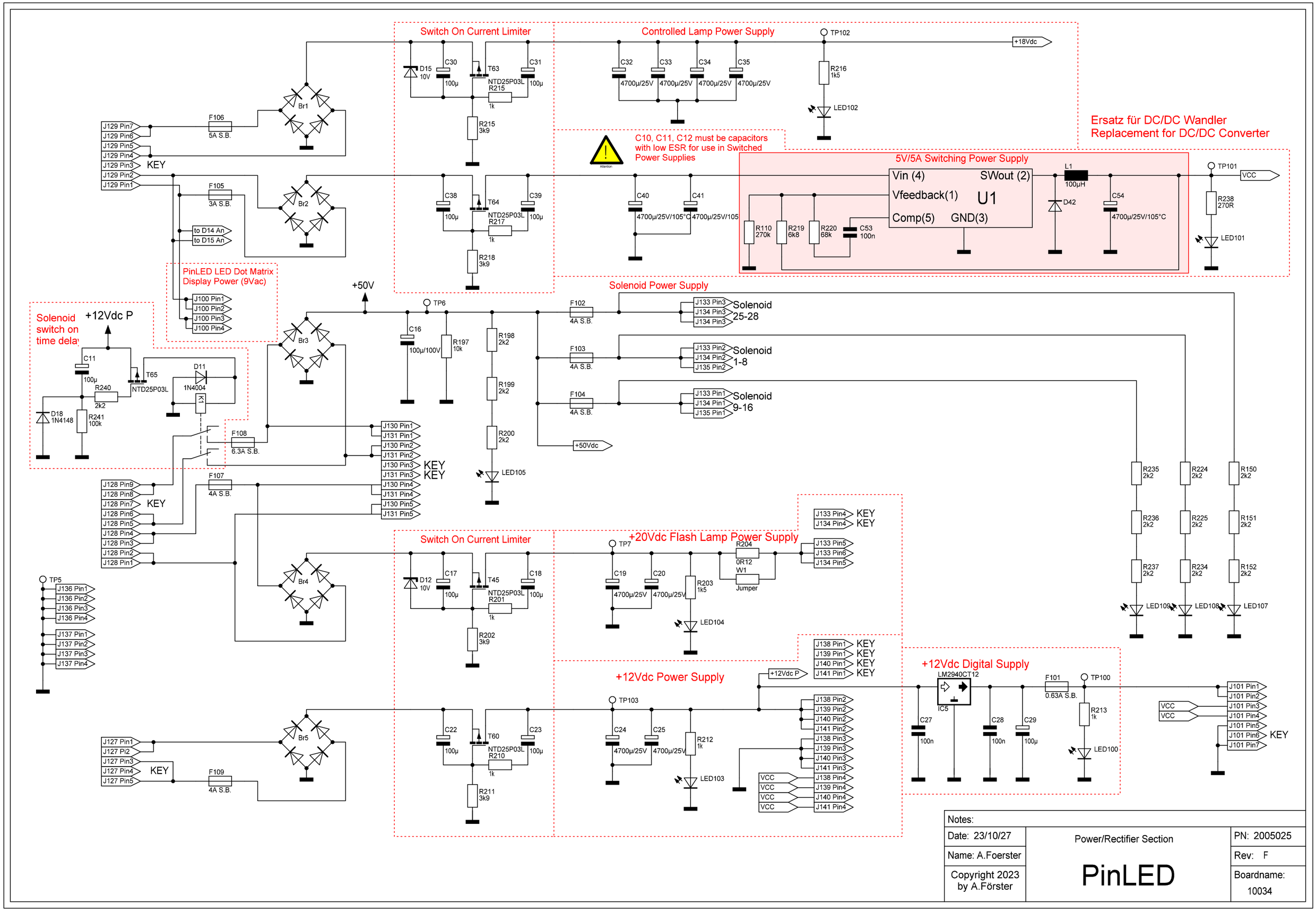
Switch On Current Limiter
Controlled Lamp Power Supply
TP102
+18Vdc
C32
C33
C34
C35
4700µ/25V
R216
1k5
LED102
Ersatz für DC/DC Wandler
Replacement for DC/DC Converter
D15
10V
C30
100µ
T63
NTD25P03L
R215
1k
C31
100µ
R215
3k9
Br1
F106
5A S.B.
J129 Pin7
J129 Pin6
J129 Pin5
J129 Pin4
J129 Pin3
J129 Pin2
J129 Pin1
KEY
C10, C11, C12 must be capacitors
with low ESR for use in Switched
Power Supplies
5V/5A Switching Power Supply
Vin (4)
SWout (2)
Vfeedback(1)
U1
Comp(5)
GND(3)
L1
100µH
D42
C54
4700µ/25V/105°C
TP101
VCC
R238
270R
LED101
F105
3A S.B.
Br2
C38
100µ
T64
NTD25P03L
R217
1k
C39
100µ
R218
3k9
C40
C41
4700µ/25V/105°C
R110
270k
R219
6k8
R220
68k
C53
100n
to D14 An
to D15 An
PinLED LED Dot Matrix
Display Power (9Vac)
J100 Pin1
J100 Pin2
J100 Pin3
J100 Pin4
+50V
Solenoid Power Supply
TP6
F102
4A S.B.
J133 Pin3
J134 Pin3
J134 Pin3
Solenoid
25-28
Solenoid
switch on
time dela
+12Vdc P
C11
100µ
T65
NTD25P03L
R240
2k2
D18
1N4148
R241
100k
D11
1N4004
K1
Br3
C16
100µ/100V
R197
10k
R198
2k2
R199
2k2
R200
2k2
LED105
F103
4A S.B.
J133 Pin2
J134 Pin2
J135 Pin2
Solenoid
1-8
F104
4A S.B.
J133 Pin1
J134 Pin1
J135 Pin1
Solenoid
9-16
+50Vdc
F108
6.3A S.B.
J130 Pin1
J131 Pin1
J130 Pin2
J131 Pin2
J130 Pin3
J131 Pin3
KEY
KEY
J130 Pin4
J131 Pin4
J130 Pin5
J131 Pin5
J128 Pin9
J128 Pin8
J128 Pin7
J128 Pin6
J128 Pin5
J128 Pin4
J128 Pin3
J128 Pin2
J128 Pin1
KEY
F107
4A S.B.
R235
2k2
R236
2k2
R237
2k2
R224
2k2
R225
2k2
R234
2k2
R150
2k2
R151
2k2
R152
2k2
LED109
LED108
LED107
J133 Pin4
J134 Pin4
KEY
KEY
Switch On Current Limiter
+20Vdc Flash Lamp Power Supply
TP7
R204
0R12
W1
Jumper
J133 Pin5
J133 Pin6
J134 Pin5
D12
10V
C17
100µ
T45
NTD25P03L
R201
1k
C18
100µ
R202
3k9
C19
C20
4700µ/25V
R203
1k5
LED104
TP5
J136 Pin1
J136 Pin2
J136 Pin3
J136 Pin4
J137 Pin1
J137 Pin2
J137 Pin3
J137 Pin4
J138 Pin1
J139 Pin1
J140 Pin1
J141 Pin1
KEY
KEY
KEY
KEY
+12Vdc Digital Supply
LM2940CT12
IC5
F101
0.63A S.B.
TP100
+12Vdc P
+12Vdc Power Supply
TP103
C27
100n
C28
100n
C29
100µ
R213
1k
LED100
VCC
VCC
J101 Pin1
J101 Pin2
J101 Pin3
J101 Pin4
J101 Pin5
J101 Pin6
J101 Pin7
KEY
J127 Pin1
J127 Pi2
J127 Pin3
J127 Pin4
J127 Pin5
KEY
F109
4A S.B.
Br5
C22
100µ
T60
NTD25P03L
R210
1k
C23
100µ
R211
3k9
C24
C25
4700µ/25V
R212
1k
LED103
J138 Pin2
J139 Pin2
J140 Pin2
J141 Pin2
J138 Pin3
J139 Pin3
J140 Pin3
J141 Pin3
VCC
VCC
VCC
VCC
J138 Pin4
J139 Pin4
J140 Pin4
J141 Pin4
Br4
Notes:
Date: 23/10/27
Name: A.Foerster
Copyright 2023
by A.Förster
Power/Rectifier Section
PinLED
PN: 2005025
Rev: F
Boardname:
10034

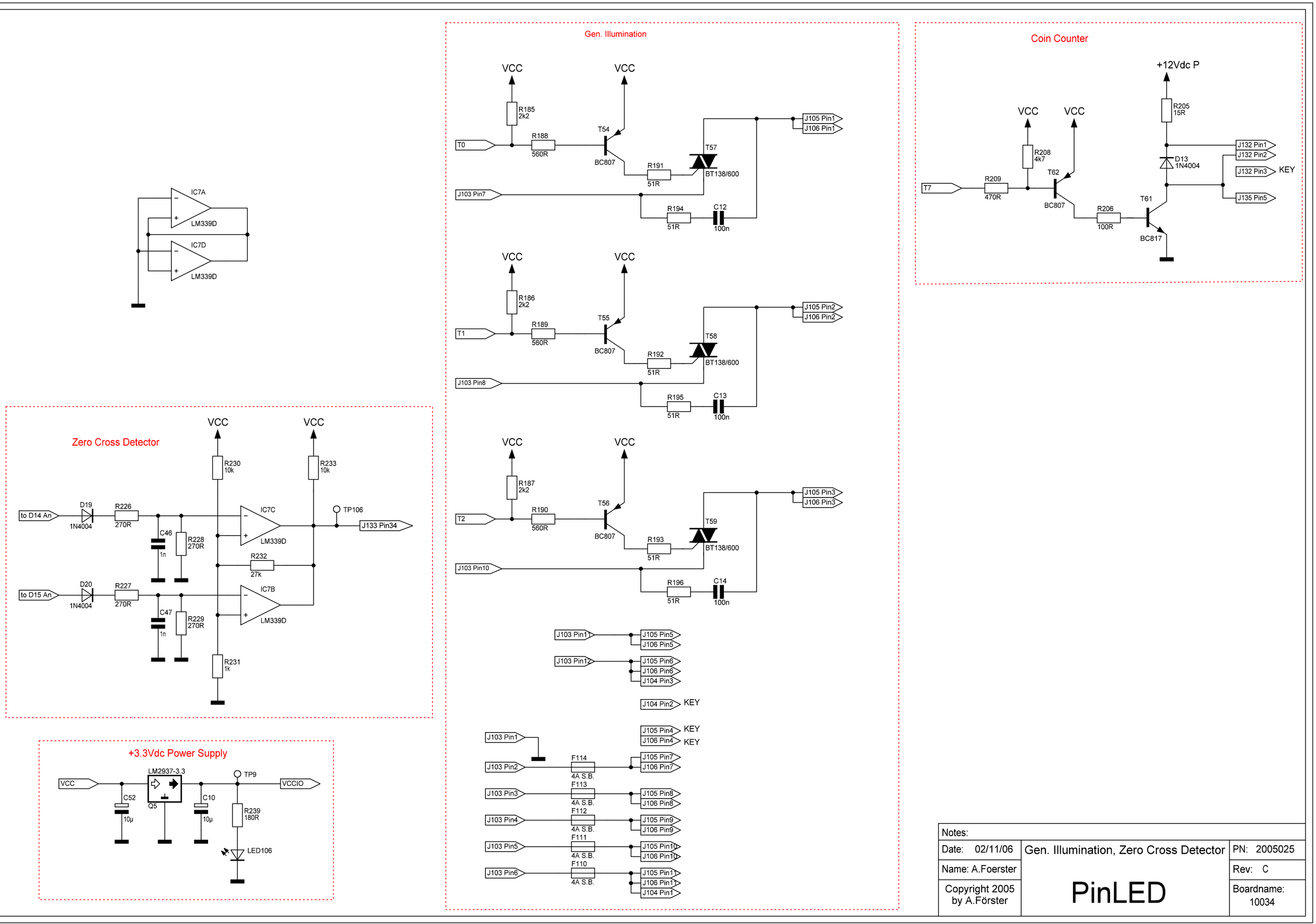

Notes:		
Date: 02/11/06	Gen. Illumination, Zero Cross Detector	PN: 2005025
Name: A.Foerster		Rev: C
Copyright 2005 by A.Förster	PinLED	Boardname: 10034

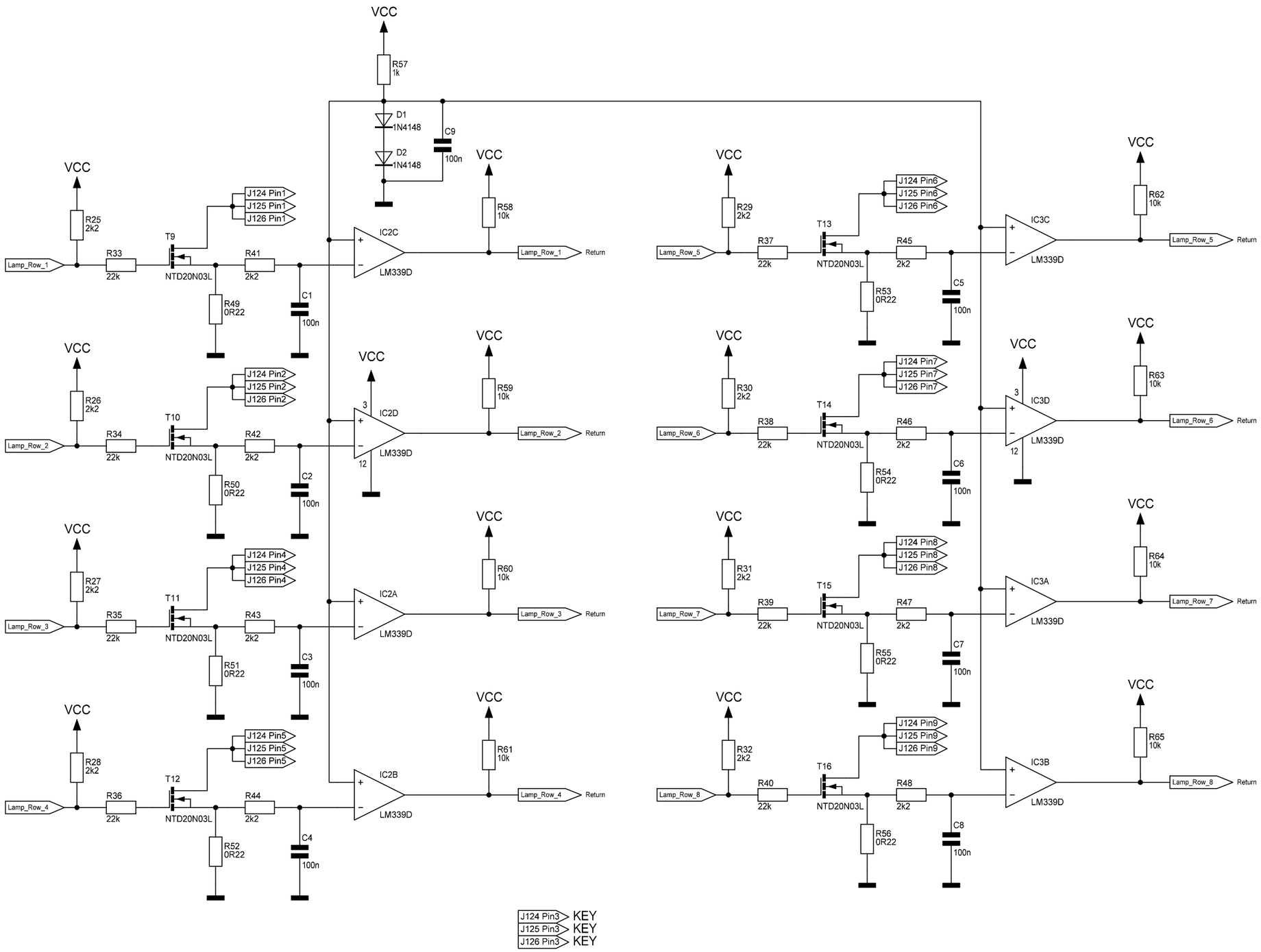

Notes:		
Date: 02/11/06	Lamp Rows	PN: 2005025
Name: A.Foerster		Rev: C
Copyright 2005 by A.Förster	PinLED	Boardname: 10034

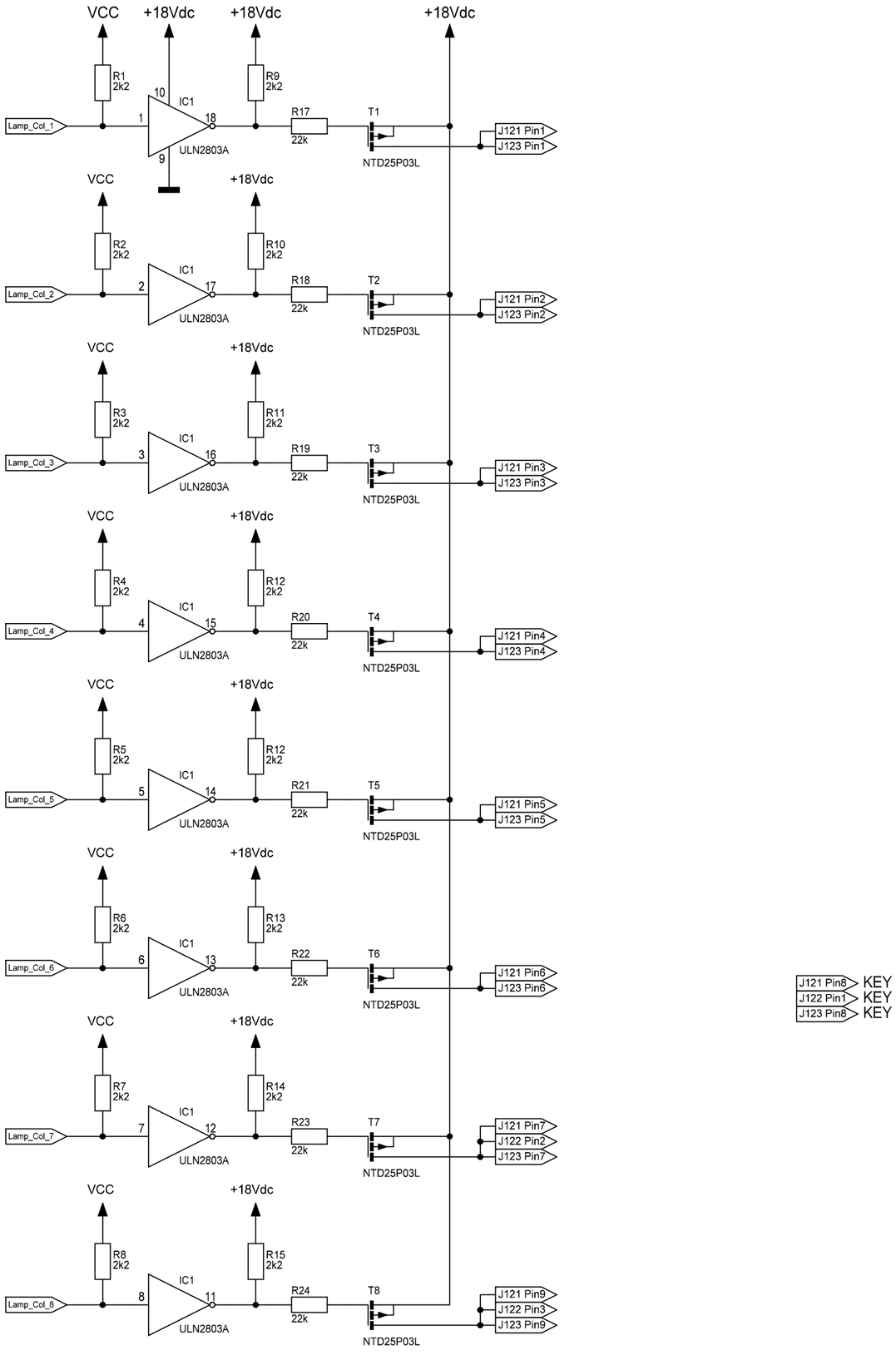

Notes:		
Date: 02/11/06	Lamp Columns	PN: 2005025
Name: A.Foerster	PinLED	Rev: C
Copyright 2005 by A.Förster		Boardname: 10034

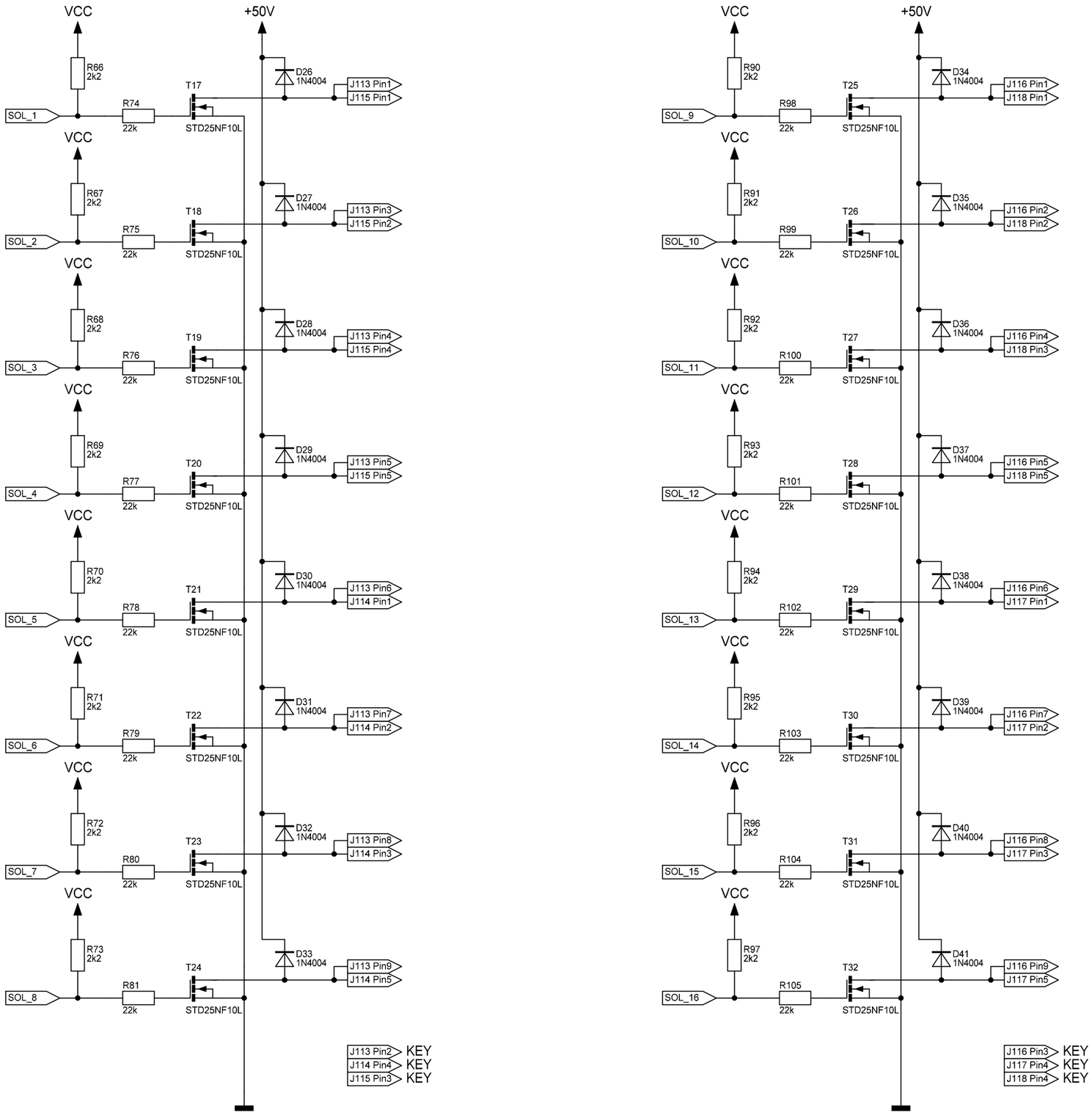

Notes:		
Date: 02/11/06	Solenoids 1-16	PN: 2005025
Name: A.Foerster		Rev: C
Copyright 2005 by A.Förster	PinLED	Boardname: 10034

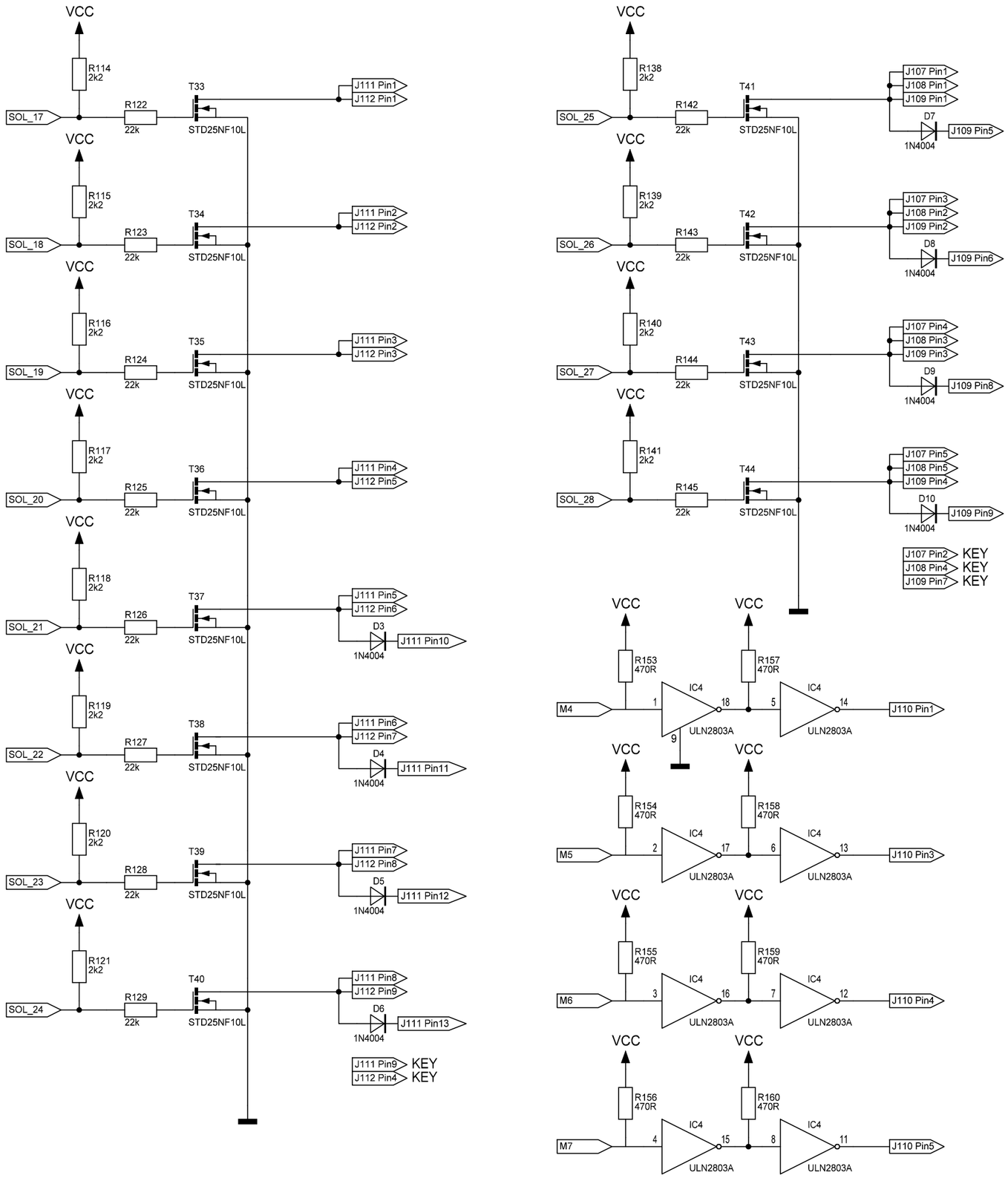

Notes:		
Date: 02/11/06	Solenoids 17-28	PN: 2005025
Name: A.Foerster		Rev: C
Copyright 2005 by A.Förster	PinLED	Boardname: 10034

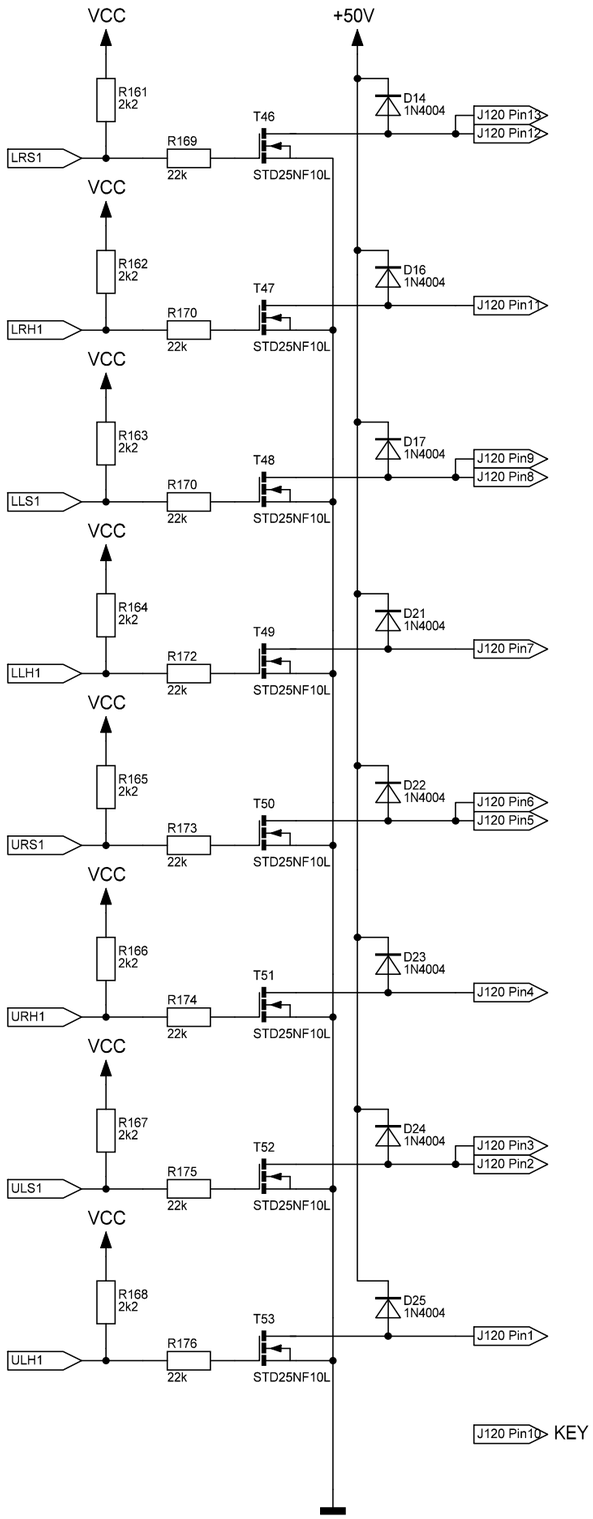

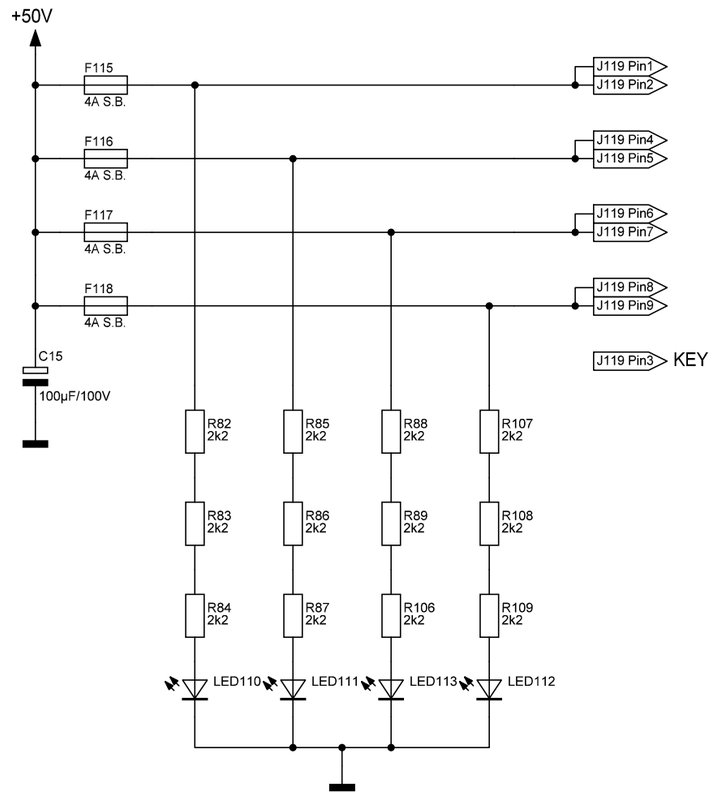

Notes:		
Date: 02/11/06	Flipper Circuit	PN: 2005025
Name: A.Foerster		Rev: C
Copyright 2005 by A.Förster	PinLED	Boardname: 10034

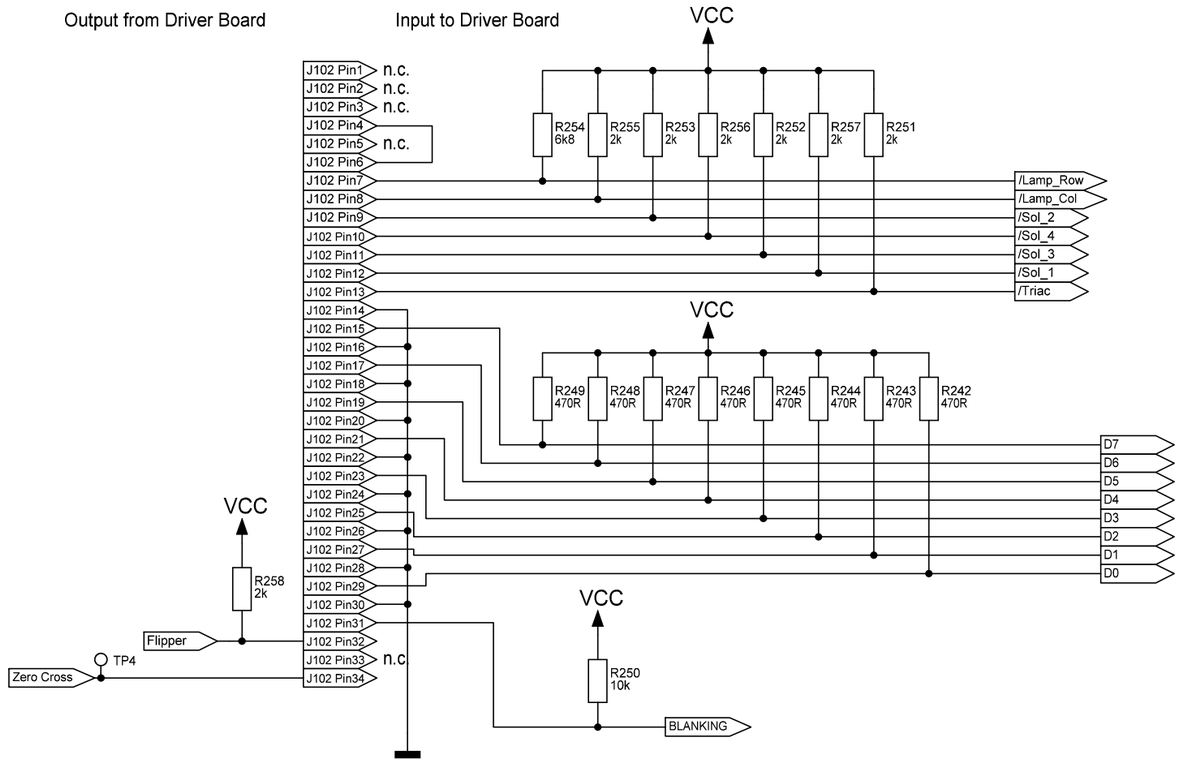

Notes:		
Date: 02/11/06	Digital I/O Ports	PN: 2005025
Name: A.Foerster		Rev: C
Copyright 2005 by A.Förster	PinLED	Boardname: 10034

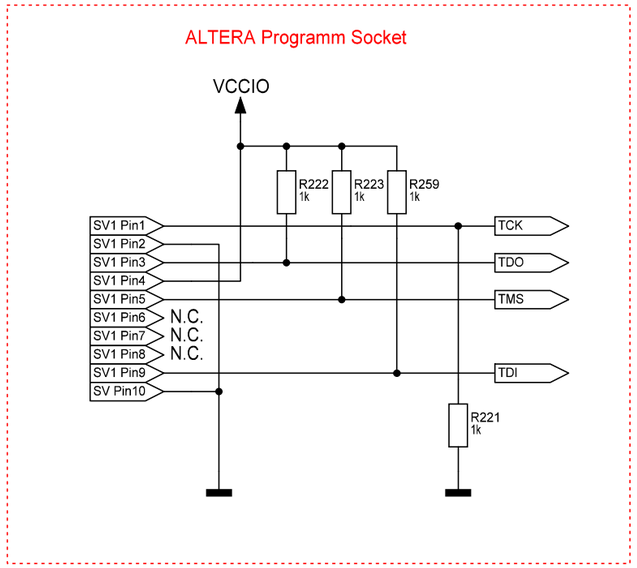

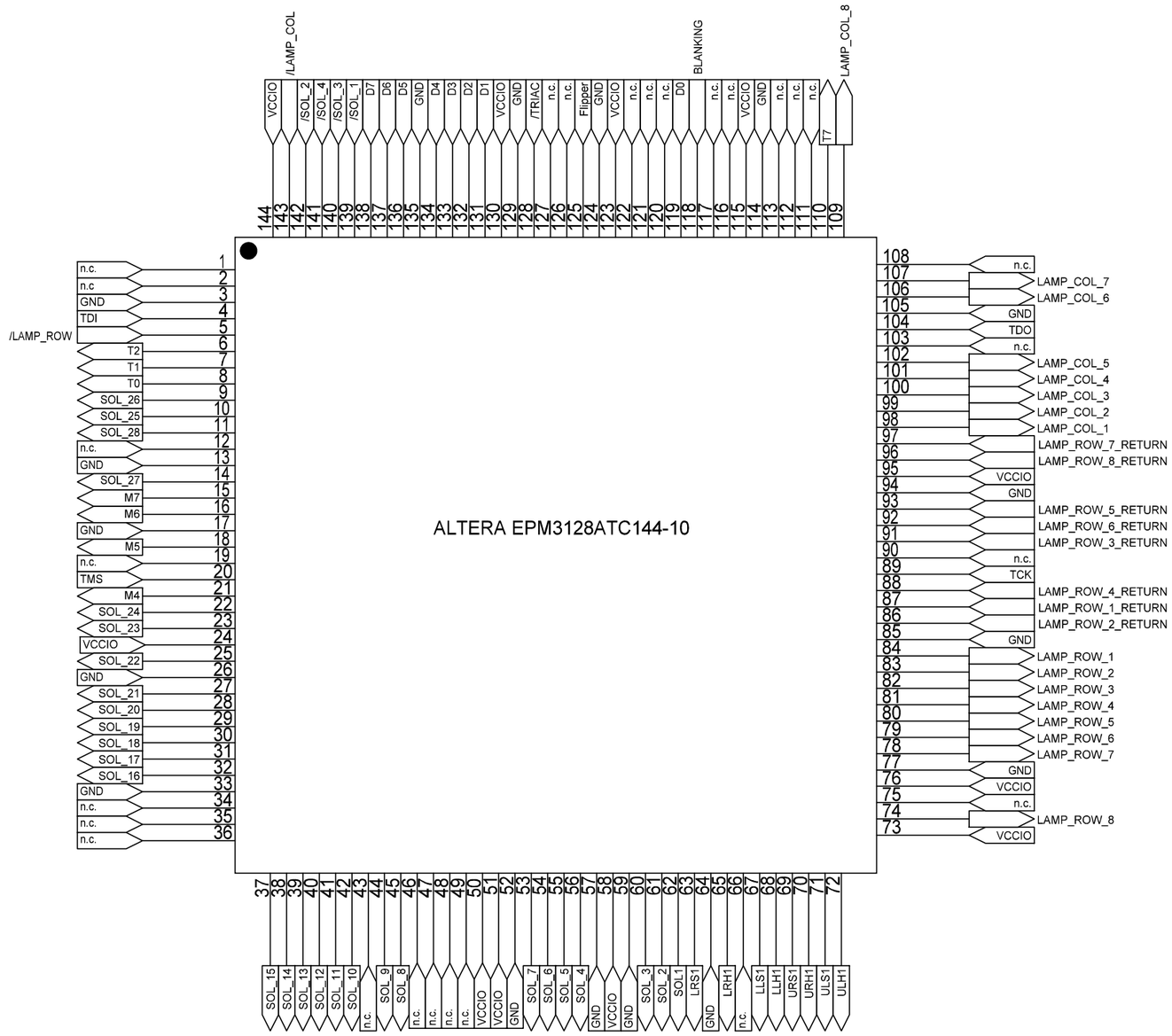

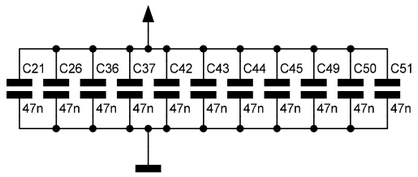

Notes:

Date: 02/11/06	CPLD Chip	PN: 2005025
Name: A.Foerster		Rev: C
Copyright 2005 by A.Förster	PinLED	Boardname: 10034

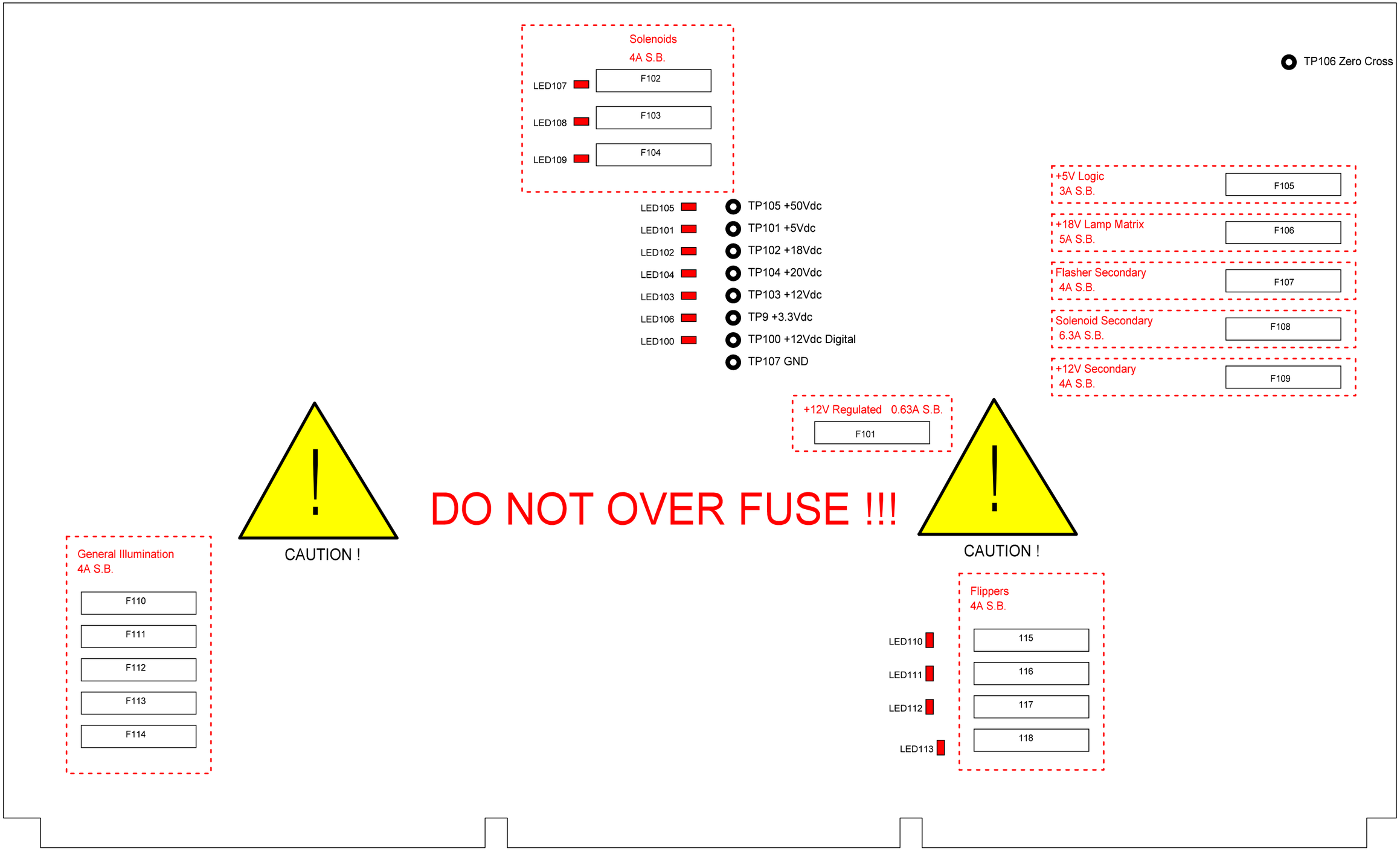

Notes:		
Date: 04/16/06	Fuse Overview	PN: 2005025
Name: A.Foerster		Rev: C
Copyright 2005 by A.Förster	PinLED	Boardname: 10034

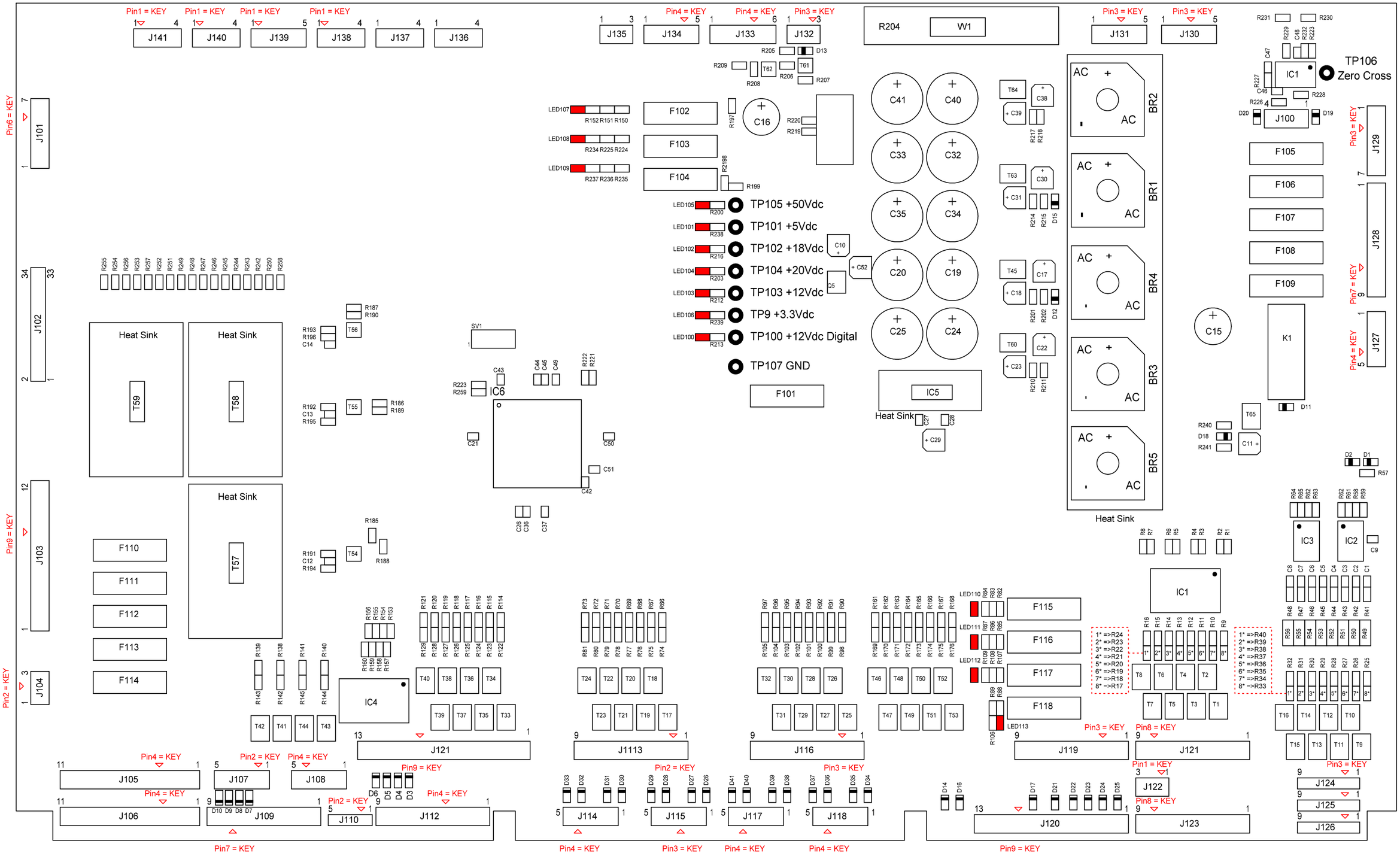

Notes:

Date: 02/11/06	Parts / Bauteile	PN: 2005025
Name: A.Foerster	PinLED	Rev: C
Copyright 2005 by A.Förster		Boardname: 10034

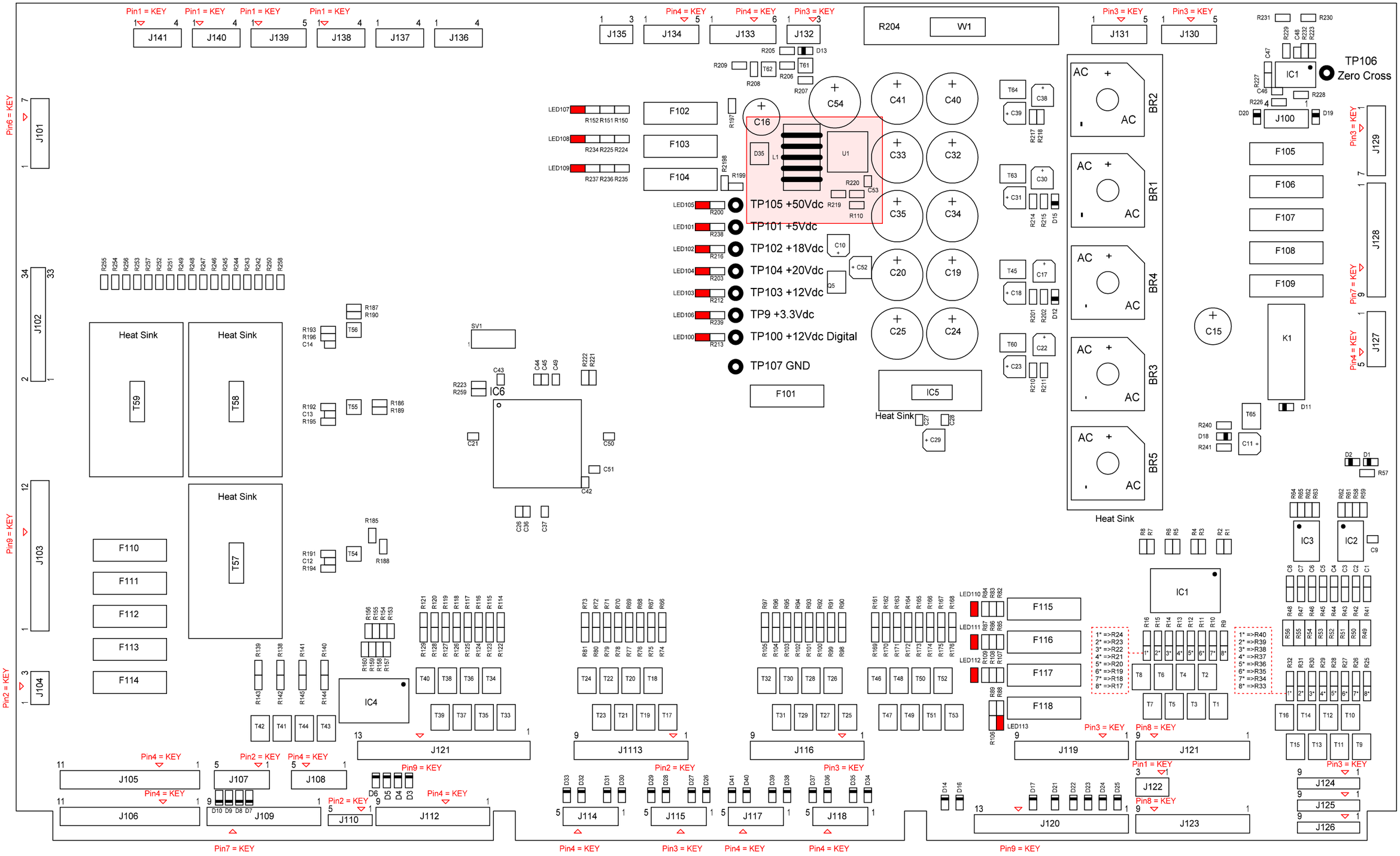

Notes:

Date: 23/10/27	Parts / Bauteile	PN: 2005025
Name: A.Foerster	PinLED	Rev: F
Copyright 2023 by A.Förster		Boardname: 10034

Parts List / Bauteilliste

BR1, BR2, BR3, BR4, BR5		KBPC3504
C1, C2, C3, C4, C5, C6, C7, C8, C9	100nF	0805
C10	10µF/16V	SMD
C11	100µF/25V	SMD
C12, C13, C14	100nF	SMD
C15, C16	100µF/100V	
C17, C18	100µF/25V	SMD
C19, C20	4700µF/25V	
C21	47nF	0805
C22,C23	100µF/25V	SMD
C24, C25	4700µF/25V	
C26	47nF	SMD
C27, C28	100nF	SMD
C29, C30, C31	100µF/25V	SMD
C32, C33, C34, C35	4700µF/25V	
C36, C37	47nF	0805
C38, C39	100µF/25V	SMD
C40, C41	4700µF/25V	
C42, C43, C44, C45	47nF	0805
C46, C47	1nF	0805
C48	100nF	SMD
C49, C50, C51	47nF	0805
C52	10µF/16V	SMD
C53	100nF	0805
C54	4700µF/25V	
D1, D2	1N4148	SOD80C
D3, D4, D5, D6, D7, D8, D9, D10, D11, D11	1N4004	SOD106W
D12	10V	SOD80C
D13, D14	1N4004	SOD106W
D15	10V	SOD80C
D16, D17	1N4004	SOD106W
D18	1N4148	SOD80C
D19, D20, D21, D22, D23, D24, D25, D26	1N4004	SOD106W
D27, D28, D29, D30, D31, D32, D33, D34	1N4004	SOD106W
D35, D36, D37, D38, D39, D40, D41	1N4004	SOD106W
D42	UPS540E3	
F101	0.63A, S.B	5x20mm
F102, F103, F104	4A, S.B	5x20mm
F105	3A, S.B	5x20mm
F106	5A, S.B	5x20mm
F107	4A, S.B	5x20mm
F108	6.3A, S.B	5x20mm
F109, F110, F111, F112, F113	3A, S.B	5x20mm
F114, F115, F116, F117, F118	3A, S.B	5x20mm
IC1	ULN2803A	SO18
IC2, IC3	LM339D	SO14
IC4	ULN2803A	SO18
IC5	LM2940CT12	TO220
IC6	EPM3128ATC144-10	FPGA100
IC7	LM339D	SO14
J100	MLSS156-4	3.96mm
J101	MLSS156-7	3.96mm
J102	Header 2x17	2.54mm
J103	MLSS156-12	3.96mm
J104	MLSS156-3	3.96mm
J105, J106	MLSS156-11	3.96mm
J107, J108	MLSS156-5	3.96mm
J109	MLSS156-9	3.96mm
J110	MLSS100-5	2.54mm
J111	MLSS156-13	3.96mm
J112, J113	MLSS156-9	3.96mm
J114, J115	MLSS156-5	3.96mm
J116	MLSS156-9	3.96mm
J117, J118	MLSS156-5	3.96mm
J119	MLSS156-9	3.96mm
J120	MLSS156-13	3.96mm
J121	MLSS156-9	3.96mm
J122	MLSS156-3	3.96mm
J123	MLSS156-9	3.96mm
J124. J125, J126	MLSS100-9	2.54mm
J127	MLSS156-5	3.96mm
J128	MLSS156-9	3.96mm
J129	MLSS156-7	3.96mm
J130, J131	MLSS156-5	3.96mm
J132	MLSS156-3	3.96mm
J133	MLSS156-6	3.96mm
J134	MLSS156-5	3.96mm
J135	MLSS156-3	3.96mm
J136, J137, J138	MLSS156-4	3.96mm
J139	MLSS156-5	3.96mm
J140, J141	MLSS156-4	3.96mm
K1	Finder Relais 40.52.9	12V
LED100 to LED113	Red 20mA	1206
L1	100µH	
Q5	LM2937-3.3	SOT223
R1 to R16	2k2	1206
R17 to R24	22k	1206
R25 to R32	2k2	1206
R33 to R40	22k	1206
R41 to R48	2k2	1206
R49 to R56	0R22 /1W	2512
R57	1k	1206
R58 to R65	10k	1206
R66 to R73	2k2	1206
R74 to R81	22k	1206
R82 to R97	2k2	1206
R98 to R105	22k	1206
R106 to R121	2k2	1206
R122 to R129	22k	1206
R138 to 141	2k2	1206
R142 to R145	22k	1206
R150 to 152	2k2	1206
R153 to R160	470R	1206
R161 to R168	2k2	1206
R169 to R176	22k	1206
R185 to R187	2k2	1206
R188 to R190	560R	1206
R191 to R196	51R	1206
R197	10k	1206
R198 to R200	2k2	1206
R201	1k	1206
R202	3k9	1206
R203	1k5	1206
R204	0R12/11W	KH216-8
R205	15R	1206
R206	100R	1206
R207	10k	1206
R208	4k7	1206
R209	470R	1206
R210	1k	1206
R211	3k9	1206
R212 to R214	1k	1206
R215	3k9	1206
R216	1k5	1206
R217	1k	1206
R218	3k9	1206
R219	1k	1206
R220	470R	1206
R221 to R223	1k	1206
R224, R225	2k2	1206
R226 to R229	270R	1206
R230	10k	1206
R231	1k	1206
R232	27k	1206
R233	10k	1206
R234 to R237	2k2	1206
R238	270R	1206
R239	180R.	1206
R240	2k2	1206
R241	100k..	1206
R242 to R249	470R	1206
R250	10k	1206
R251 to R253	2k	1206
R254	6k8	1206
R255 to R258	2k	1206
R259	1k	1206
SV1	Header 2x5	2,54mm
T1, T2, T3, T4, T5, T6, T7, T8	NTD25P03L	DPAK
T9, T10, T11, T12, T13, T14, T15, T16	NTD20N03L	DPAK
T17, T18, T19, T20, T21, T22, T23, T24	STD25NF10L	DPAK
T25, T26, T27, T28, T29, T30, T31, T32	STD25NF10L	DPAK
T33, T34, T35, T36, T37, T38, T39, T40	STD25NF10L	DPAK
T41, T42, T43, T44	STD25NF10L	DPAK
T45	NTD25P03L	DPAK
T46, T47, T48, T49, T50, T51, T52, T53	STD25NF10L	DPAK
T54, T55, T56	BC807	SOT23
T57, T58, T59	BT138/600	TO220
T60	NTD25P03L	DPAK
T61	BC817	SOT23
T62	BC807	SOT23
T63, T64, T65	NTD25P03L	DPAK
TP9, TP100, TP101, TP102, TP103, TP104	Testpoints	
TP105, TP106, TP107	Testpoints	
U1	MC34167D2T	
W1	0R Jumper	wire

Notes:		
Date: 04/16/06	Parts / Bauteile	PN: 2005025
Name: A.Foerster		Rev: C
Copyright 2005 by A.Förster	PinLED	Boardname: 10034